NSLS085GREY

NEOMOUNTS FOLDABLE LAPTOP STAND

SPECIFICATIONS

GENERAL

Min. screen size*	10 inch
Max. screen size*	17 inch
Min. weight	0 kg (per screen)
Max. weight	5 kg (per screen)
Screens	1
Desk mount	Stand

FUNCTIONALITY

Type	Tilt
Height adjustment	7,8-12,4 cm
Width adjustment	22,3 cm
Depth adjustment	23,5 cm
Tilt (degrees)	36°
Adjustment type	Manual

INFORMATION

Color	Grey
Main material	Aluminium
Warranty	5 year
EAN code	8717371448295

*Please note: The inch sizes stated are just an indication, combined with the weight and VESA sizes. The maximum weight and VESA size are absolute restrictions for the products and should not be exceeded.

Neomounts foldable laptop stand - Grey

The Neomounts NSLS085GREY is a universal stand for laptops from 10" up to 17", with a maximum weight capacity of 5 kg. The stand has six different height positions and a ultra-slim folding design.

The lightweight, compact design makes the stand ideal to take with you wherever you want. The open configuration ensures good ventilation of the laptop and the anti-skid silicon pads and safety ledge stopper ensure solid positioning.

NSLS085GREY NEOMOUNTS FOLDABLE LAPTOP STAND

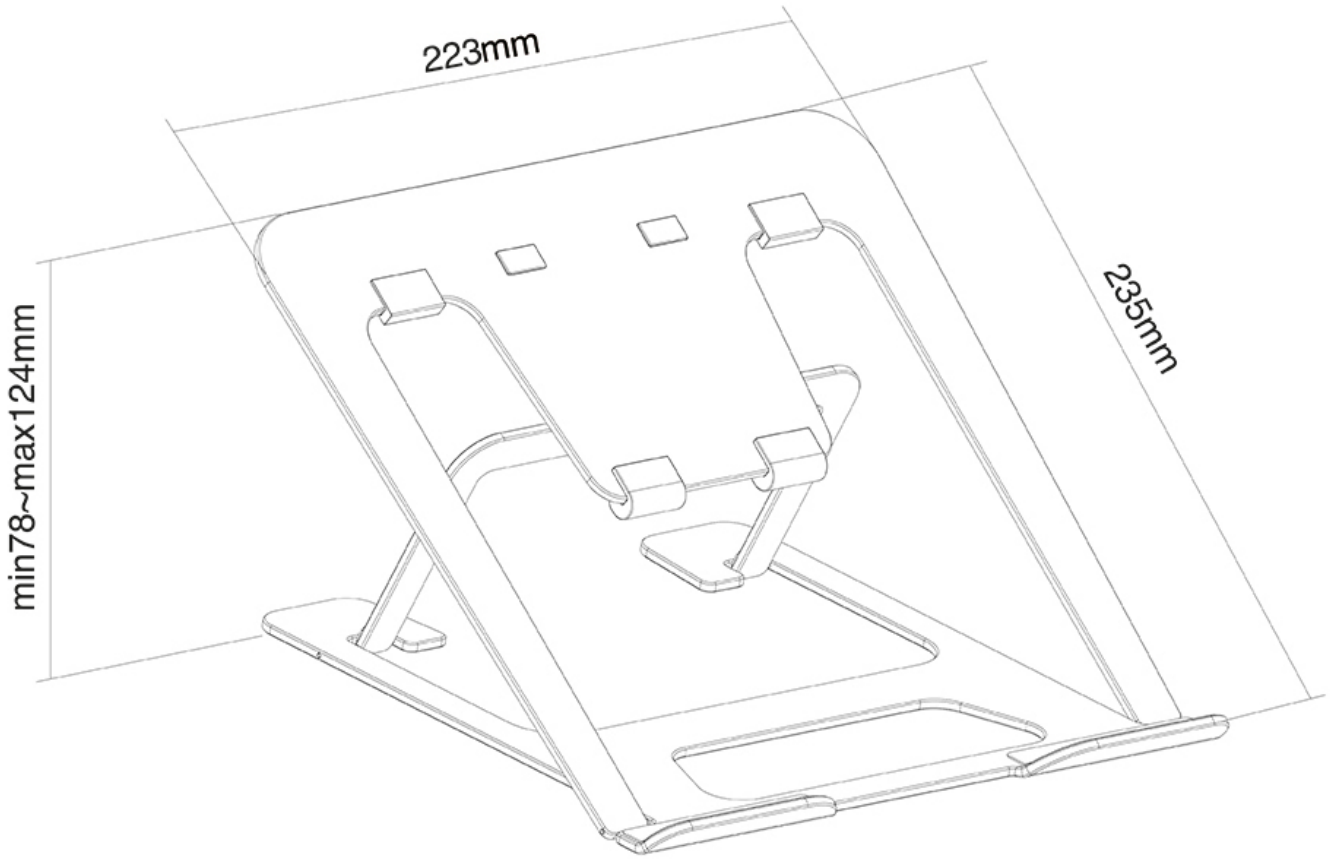

Neomounts B.V. | Wateringweg 62 | 2031 EJ Haarlem | The Netherlands | +31(0)23-5478888 | info@neomounts.com | www.neomounts.com
Chamber of Commerce 37076185 | VAT NL805154383B01 | BIC RABONL2U | IBAN NL51RABO0375403299