WL40S-850BL14

NEOMOUNTS TV WALL MOUNT

SPECIFICATIONS

GENERAL

Min. screen size*	32 inch
Max. screen size*	65 inch
Max. weight	40 kg (per screen)
Screens	1
VESA minimum	100x100 mm
VESA maximum	400x400 mm
Distance to wall	4,7-55,5 cm

FUNCTIONALITY

Type	Tilt Swivel Full motion
Lockable	Not lockable
Tilt (degrees)	+12°, -2°
Swivel (degrees)	45°
Height	44,9 cm
Width	44,9 cm
Depth	4,7 cm

INFORMATION

Color	Black
Main material	Steel
Warranty	5 year
EAN code	8717371448837

*Please note: The inch sizes stated are just an indication, combined with the weight and VESA sizes. The maximum weight and VESA size are absolute restrictions for the products and should not be exceeded.

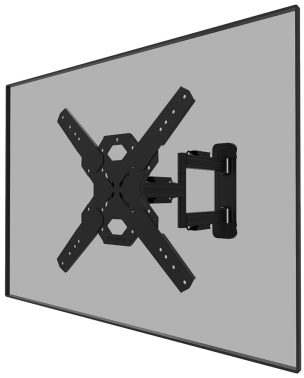

Neomounts WL40S-850BL14 full motion wall mount for 32-65" screens - Black

The Neomounts WL40S-850BL14 LEVEL is a full motion wall mount for flat screens up to 65" with a maximum weight capacity of 40 kg. The versatile tilt (14°) and swivel (45°) technology allows you to create the optimum viewing angle. The mount can be levelled for the perfect installation.

The LEVEL 850 wall mount has a depth of 4,7-55,5 cm and is suitable for screens that meet VESA hole pattern 100x100 to 400x400mm.

The WL40S-850BL14 features a nifty Easy-release system, that allows you to attach the TV in a wink of an eye. A separate spirit level tool is included with the wall mount, as well as a fixing template, to ensure easy installation of the mount. The mount is equipped with high quality steel cable management, to secure any loose cables at the back of the screen.

WL40S-850BL14 **NEOMOUNTS TV WALL MOUNT**

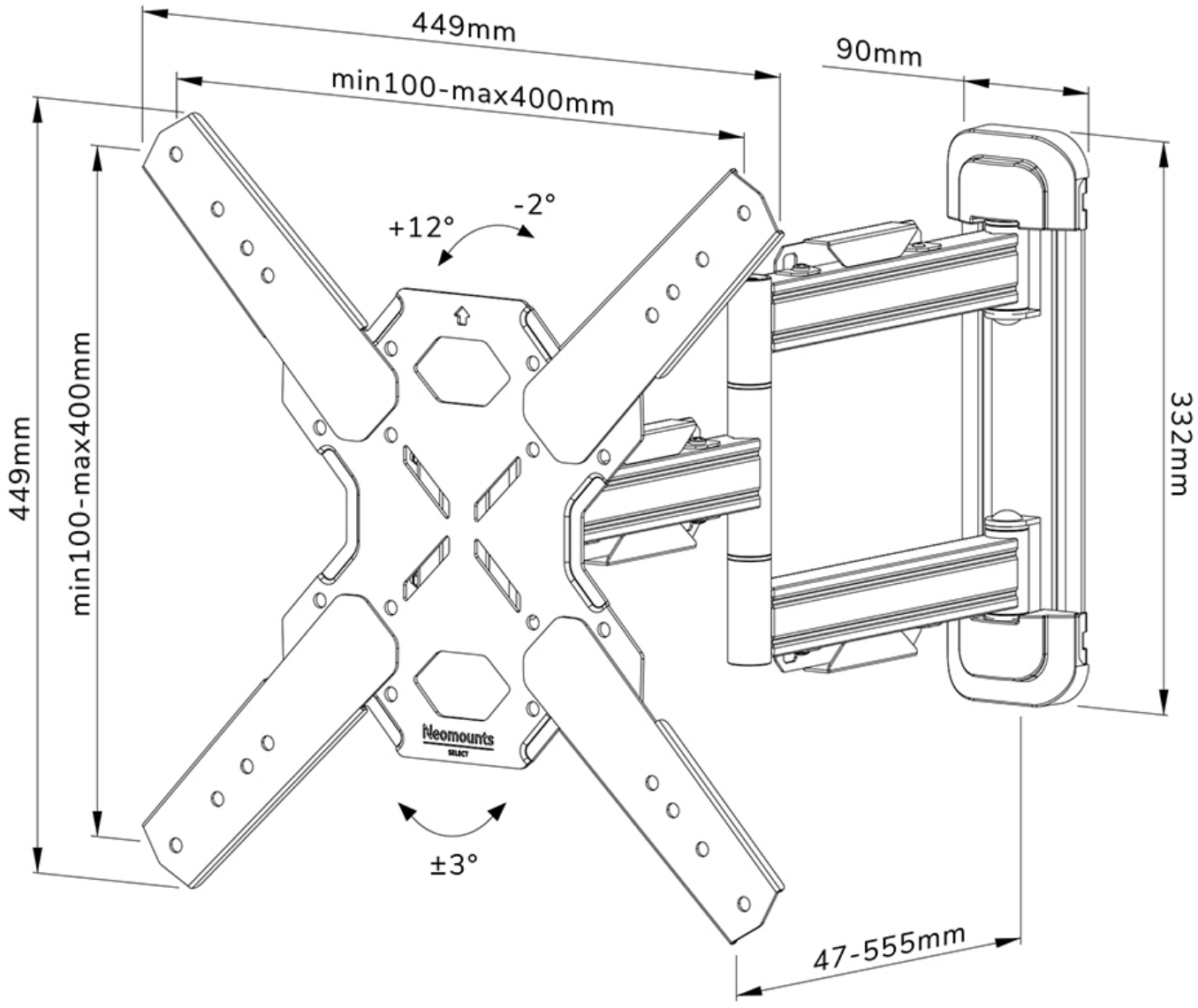

Neomounts B.V. | Wateringweg 62 | 2031 EJ Haarlem | The Netherlands | +31(0)23-5478888 | info@neomounts.com | www.neomounts.com
Chamber of Commerce 37076185 | VAT NL805154383B01 | BIC RABONL2U | IBAN NL51RABO0375403299