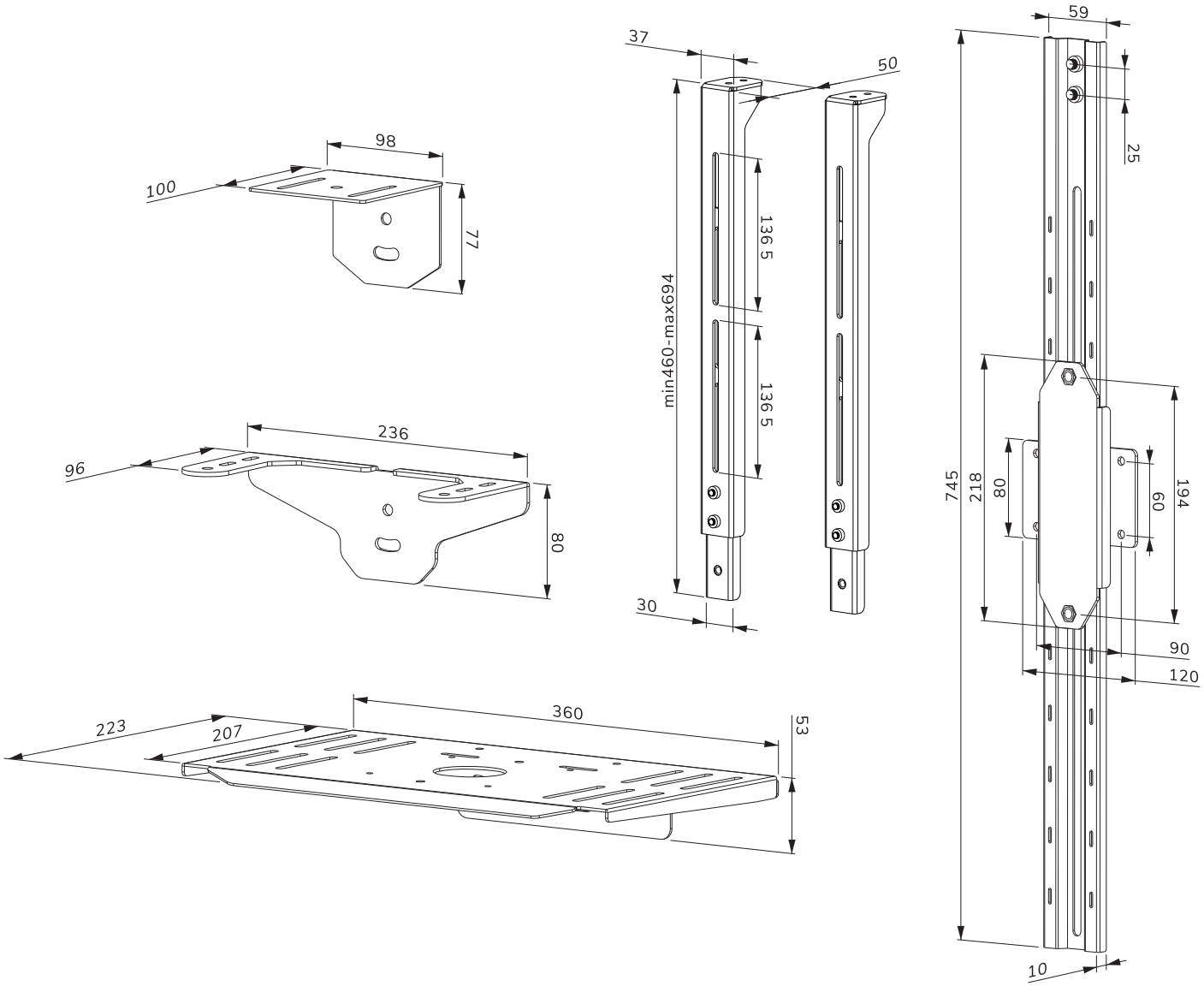

Neomounts

Measuring unit: mm

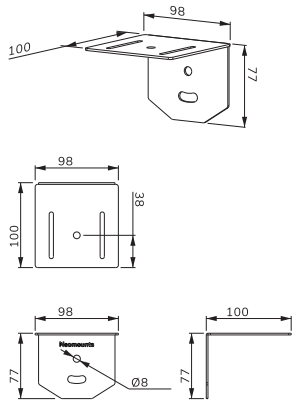
98
100
77
98
38
100
98
100
Neomounts
77
Ø8
77

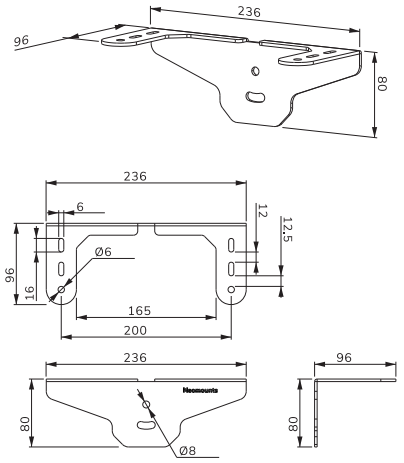
236
96
80
236
6
12
12.5
Ø6
96
16
165
200
236
96
Neomounts
80
Ø8
80

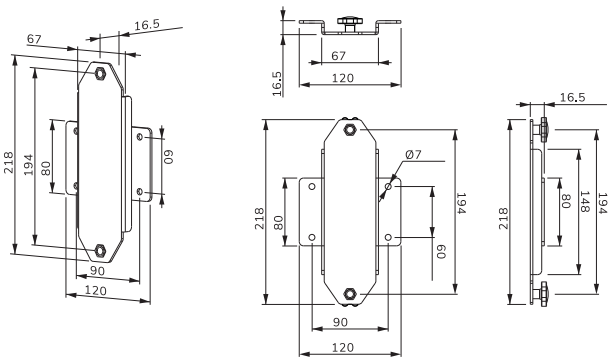
67
16.5
218
194
80
60
90
120
67
120
16.5
Ø7
218
80
194
60
90
120
16.5
218
80
148
194

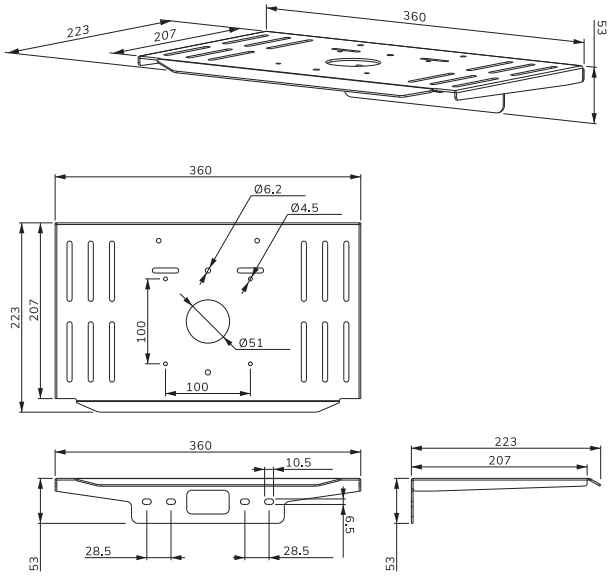
223
207
360
53
360
Ø6.2
Ø4.5
223
207
100
Ø51
100
360
10.5
9.5
53
28.5
28.5
223
207
53

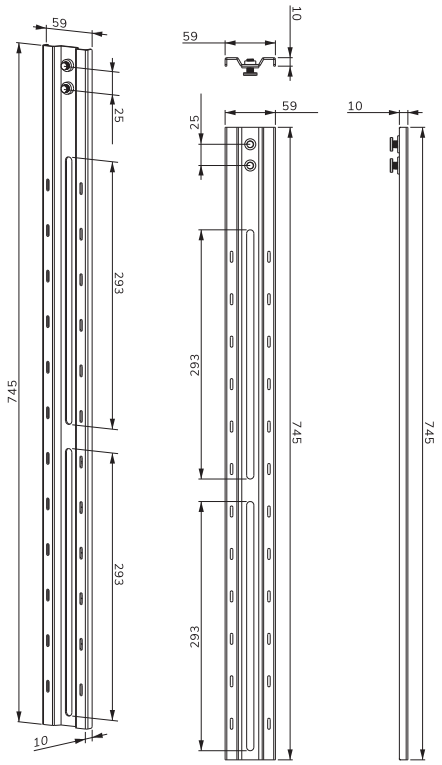
59
25
293
745
293
10
59
10
25
59
293
745
293
10
745

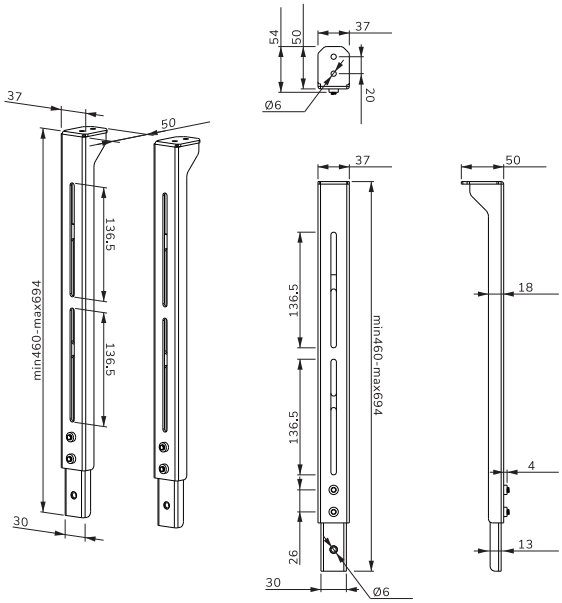
54
50
37
20
Ø6
37
50
136.5
136.5
min460-max694
30
37
50
136.5
136.5
min460-max694
18
4
13
26
30
Ø6

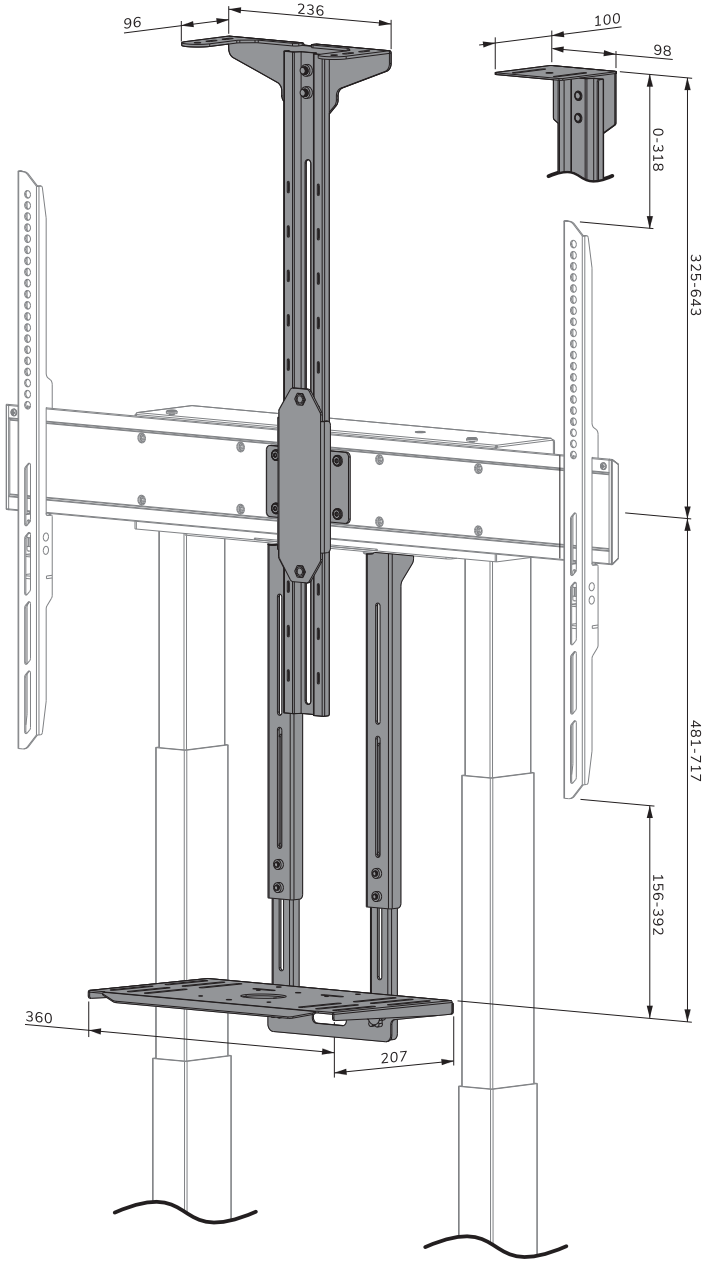

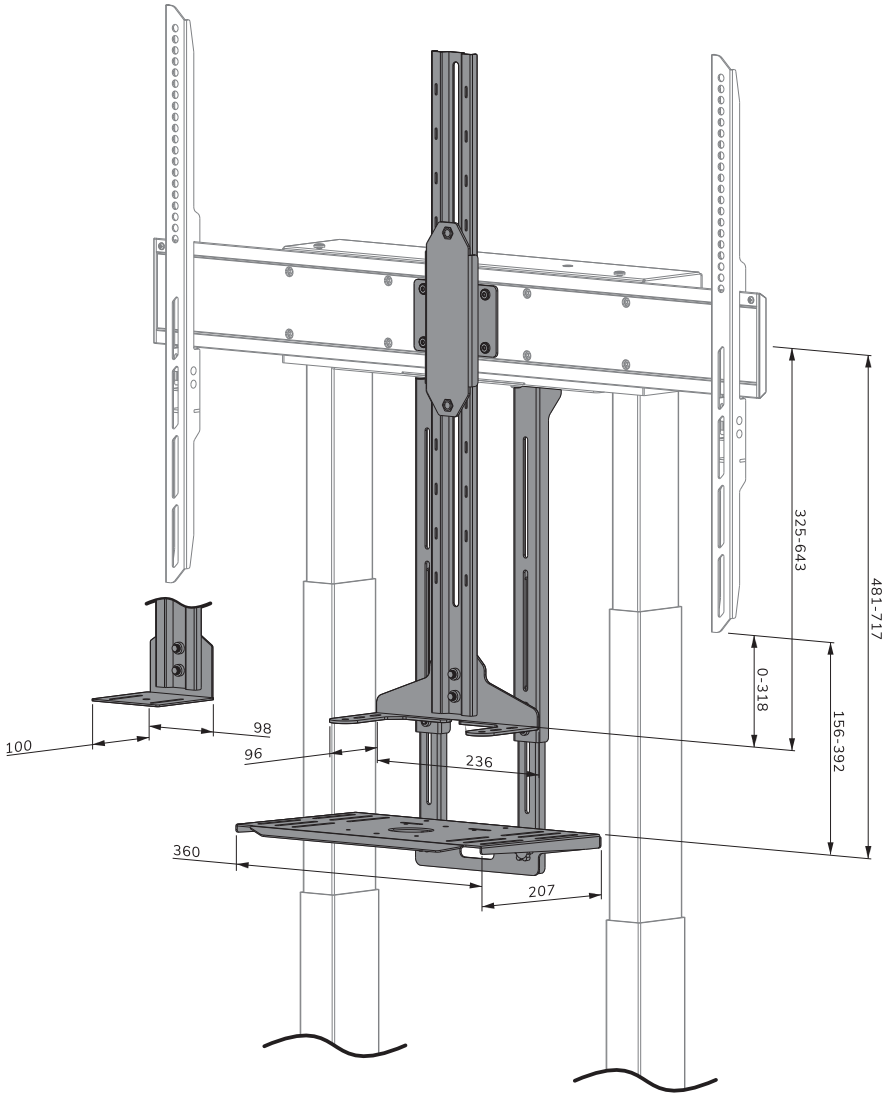

Measuring unit: mm